ISUZU
PT.ISUZU ASTRA MOTOR INDONESIA
PART DEPT.

ISUZU
GENUINE PARTS

PART INFORMATION

No : **002 / IAMI / PM / PART / III / 2011**
Tanggal : **23 Maret 2011**
Perihal : BRACKET FOG LAMP TBR541

FIG.NO : 6-30 FRONT DOOR OUTER

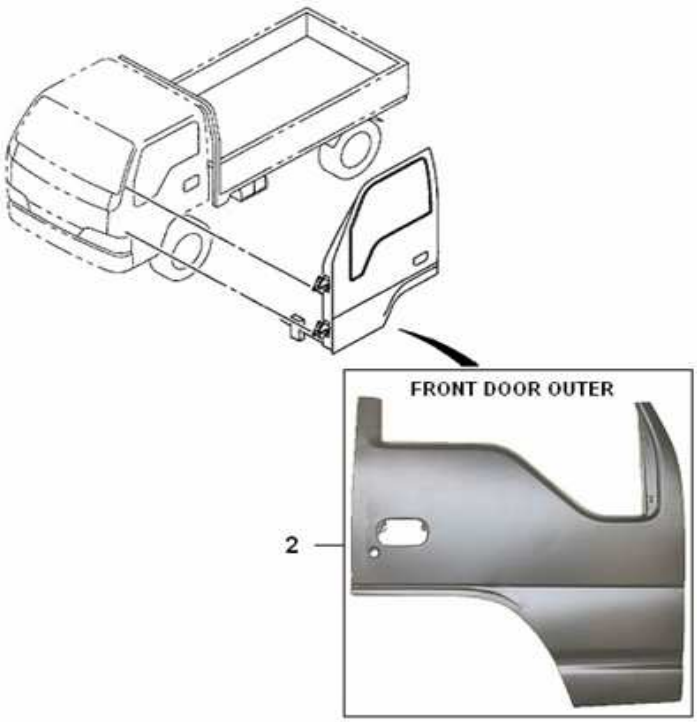

NO	PART NUMBER	DESCRIPTION	FIG NO	KEY NO	APPLED DATE	RETAIL	REMARKS
1	I8-99161 008-A	FRONT DOOR OUTER RH, N#	6-30	2	1102-	880.000	
2	I8-99161 009-A	FRONT DOOR OUTER LH, N#	6-30	2	1102-	880.000	

Prepared by : EPR , 23 Maret 2011