ISUZU

PT.ISUZU ASTRA MOTOR INDONESIA
PART DEPT.

ISUZU GENUINE PARTS

PART INFORMATION

No : **011 / IAMI / PM / PART / III / 2011**
Tanggal : **24 Maret 2011**
Perihal : PIPE ; OIL RETURN 4JB1-TC

FIG.NO : 0-52 OIL AND VACUUM PIPING ; ENGINE

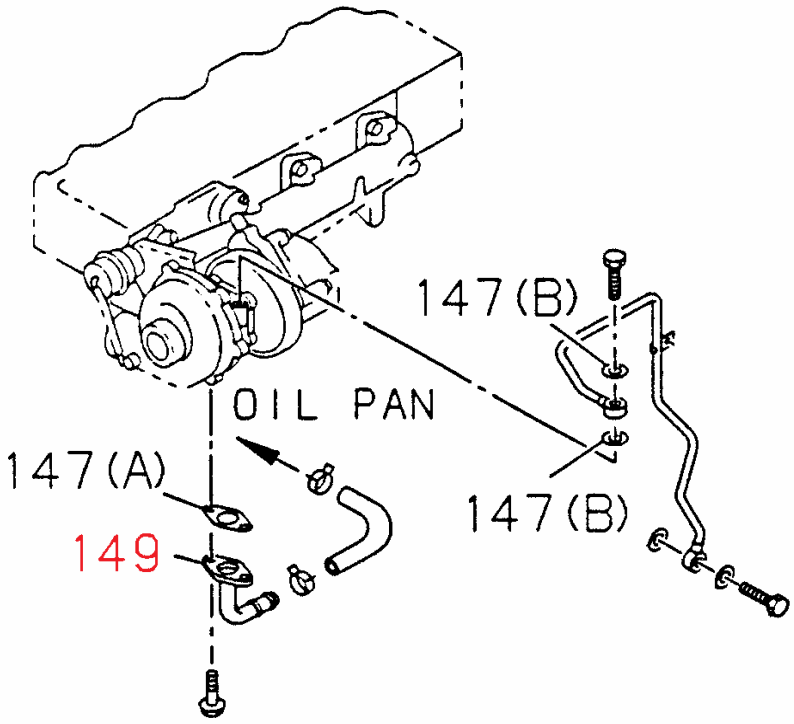

NO	PART NUMBER	DESCRIPTION	FIG NO	KEY NO	APPLED DATE	RETAIL	REMARKS
1	8-94362 672-1	GASKET ; OIL PIPE	0-52	147	0702-	8.500	(A) NHR/NKR55 EURO 2
2	9-08571 410-0	GASKET ; OIL PIPE	0-52	147	0702-	#N/A	(B) NHR/NKR55 EURO 2
3	~~8-94362 672-1~~	PIPE ; OIL RETURN	0-52	149	0702-	190.000	NHR/NKR55 EURO 2
	(8-97192 313-0)						

Prepared by : EPR , 24 Maret 2011