ISUZU

PT.ISUZU ASTRA MOTOR INDONESIA
PART DEPT.

ISUZU GENUINE PARTS

PART INFORMATION

No : **016 / IAMI / PM / PART / III / 2011**
Tanggal : **28 Maret 2011**
Perihal : ORNAMENT HEADLAMP IADG

FIG.NO : 8-01 LAMP; FRONT AND FRONT SIDE

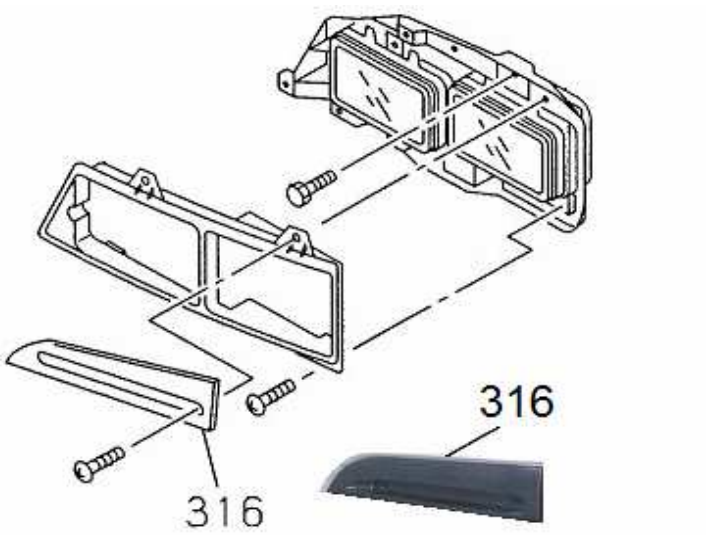

NO	PART NUMBER	DESCRIPTION	FIG NO	KEY NO	APPLED DATE	RETAIL	REMARKS
1	I6-41098 209-0	ORNAMENT; HEAD LAMP	8-01	316	0908-	72.000	RH, N series Euro2 (Black)
2	I6-41099 209-0	ORNAMENT; HEAD LAMP	8-01	316	0908-	72.000	LH, N series Euro2 (Black)

Prepared by : EPR , 28 Maret 2011