ISUZU

PT.ISUZU ASTRA MOTOR INDONESIA
PART DEPT.

ISUZU GENUINE PARTS

PART INFORMATION

No : **045 / IAMI / PM / PART / XI / 2011**
Tanggal : **11 Nov 2011**
Perihal : PISTON NHR/NKR55 EURO 2

FIG.NO : 0-15 PISTON

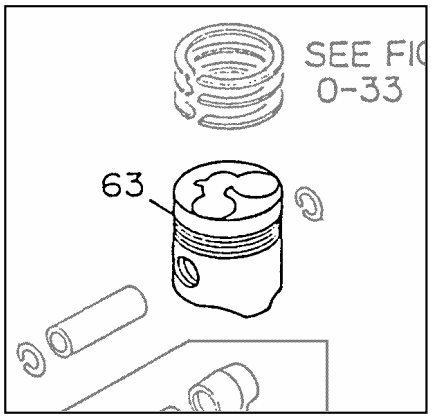

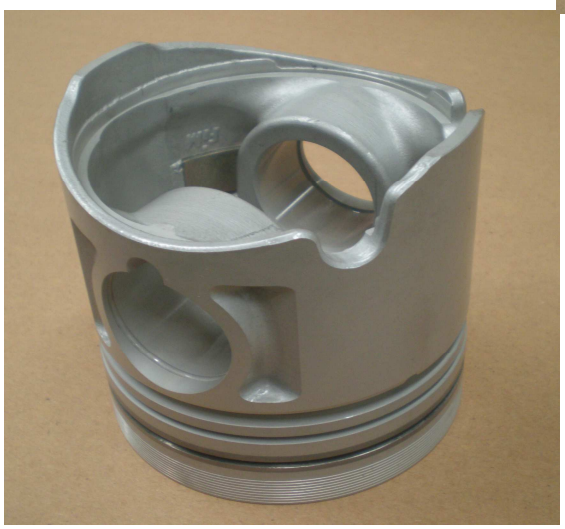

NO	PART NUMBER	DESCRIPTION	FIG NO	KEY NO	APPLED DATE	RETAIL	REMARKS
1	I8-97176 610-A	PISTON STD, NHR/NKR 55E2	0-15	63	1110-	275.000	N Series

Prepared by : Eddy Pramono , 11 Nov 2011